FE350D

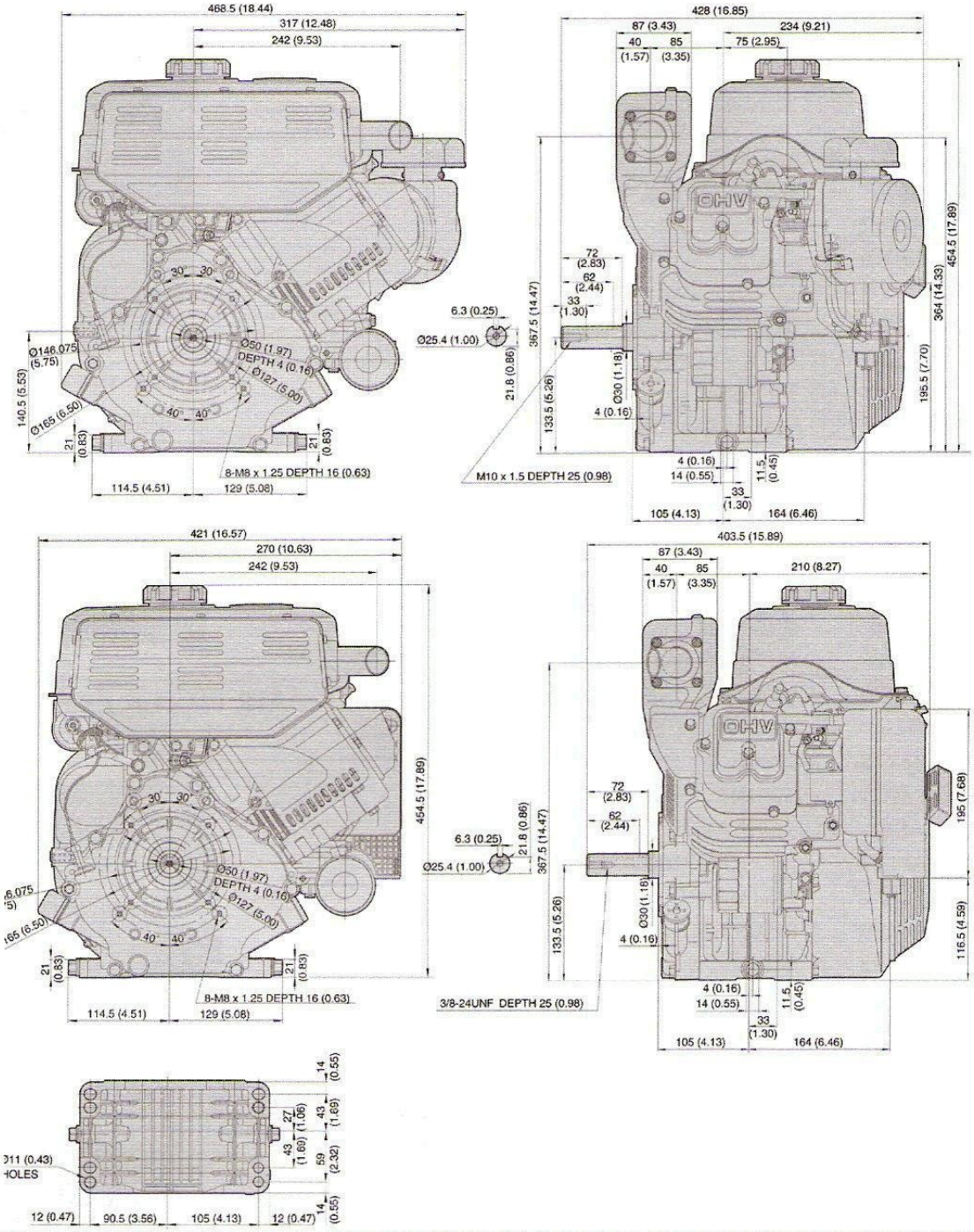
468.5 (18.44)
317 (12.48)
242 (9.53)
Ø146.075 (5.75)
140.5 (5.53)
Ø165 (6.50)
Ø50 (1.97) DEPTH 4 (0.16)
Ø127 (5.00)
8-M8 x 1.25 DEPTH 16 (0.63)
114.5 (4.51)
129 (5.08)
428 (16.85)
87 (3.43)
234 (9.21)
75 (2.95)
6.3 (0.25)
Ø25.4 (1.00)
M10 x 1.5 DEPTH 25 (0.98)
105 (4.13)
164 (6.46)
421 (16.57)
270 (10.63)
454.5 (17.89)
403.5 (15.89)
210 (8.27)
3/8-24UNF DEPTH 25 (0.98)
195 (7.68)
116.5 (4.59)
364 (14.33)
195.5 (7.70)
12 (0.47)
90.5 (3.56)
105 (4.13)
HOLES