FB460V

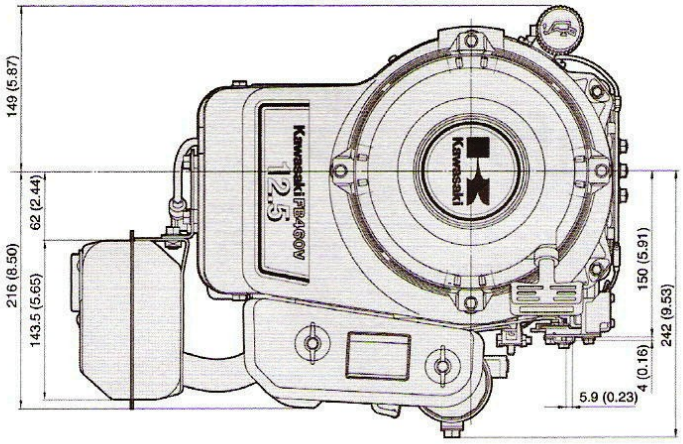
149 (5.87)
62 (2.44)
216 (8.50)
143.5 (5.65)
150 (5.91)
242 (9.53)
4 (0.16)
5.9 (0.23)
Kawasaki
12.5

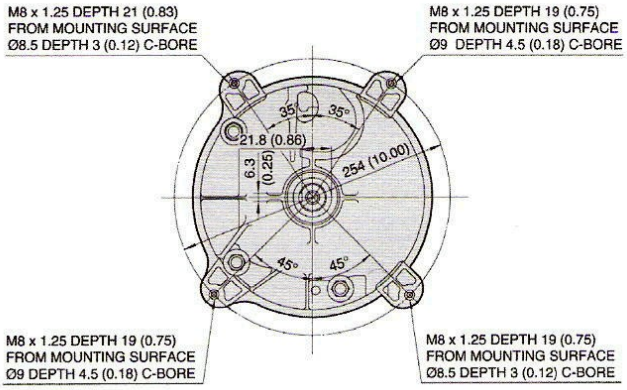
M8 x 1.25 DEPTH 21 (0.83)
FROM MOUNTING SURFACE
Ø8.5 DEPTH 3 (0.12) C-BORE
M8 x 1.25 DEPTH 19 (0.75)
FROM MOUNTING SURFACE
Ø9 DEPTH 4.5 (0.18) C-BORE
35°
35°
21.8 (0.86)
6.3
(0.25)
254 (10.00)
45°
45°
M8 x 1.25 DEPTH 19 (0.75)
FROM MOUNTING SURFACE
Ø9 DEPTH 4.5 (0.18) C-BORE
M8 x 1.25 DEPTH 19 (0.75)
FROM MOUNTING SURFACE
Ø8.5 DEPTH 3 (0.12) C-BORE

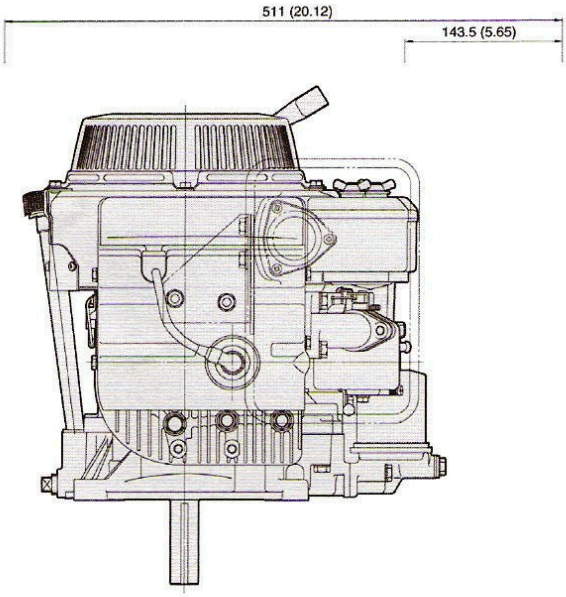
511 (20.12)
143.5 (5.65)

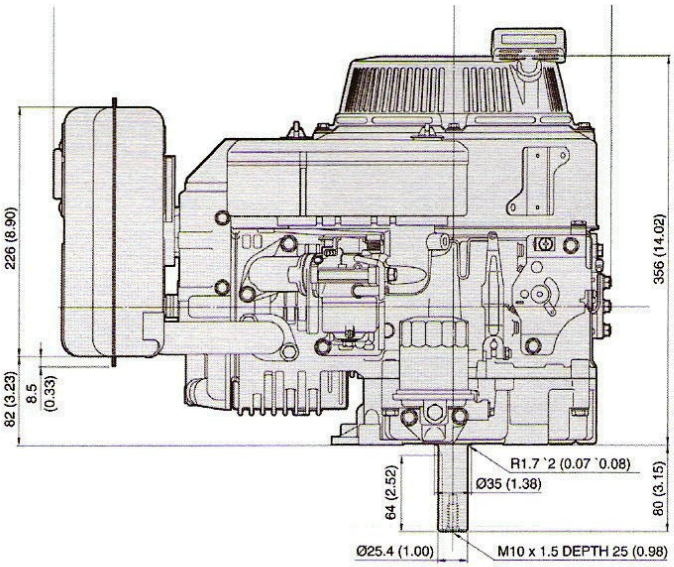
226 (8.90)
356 (14.02)
82 (3.23)
8.5
(0.33)
R1.7 `2 (0.07 `0.08)
Ø35 (1.38)
64 (2.52)
80 (3.15)
Ø25.4 (1.00)
M10 x 1.5 DEPTH 25 (0.98)